PoWer Plus Series

GeKaMac®

PoWer Plus CUT 100

Manual Instructions

Please Read and Understand This Manual
Before Operating The Welding Machine

www.gedikwelding.com

This machine is for internal use only.

It complies with the WEEE Directive.

This machine has been designed in accordance with the EN 60974-1 and EN 60974-10 standards.

The machine is safe when installation, operation, and maintenance are performed in accordance with the user manual and regulations. The operator and machine owner are responsible for adhering to safety rules.

Gedik Kaynak San. Ve Tic. A.Ş. assumes no responsibility for safety or CE compliance if any modifications are made to the machine or if safety rules are not followed.

This Class A equipment is not suitable for use in homes and similar residential areas where the power supply is provided by the low-voltage public electricity network.

This machine is not household waste and cannot be disposed of in the trash.

When the machine reaches the end of its service life or becomes obsolete, it must be disposed of in accordance with regulations.

COMPLIES WITH THE WEEE DIRECTIVE.

Eco Design Statement

This machine has been designed and manufactured in accordance with the requirements of the 2009/125/EC Eco Design Directive concerning the environmentally friendly design of energy-related products.

Accordingly, machines with an idle mode are as follows.

	Idle Mode
MMA	**X**
MIG	√
TIG	√
Plazma	√
SAW	**Out of Scope**

Efficiency measurements should be conducted only on the power unit. The water cooling system should be disabled. For more information on measurements and machine settings, Gedik Kaynak Sanayi ve Ticaret A.Ş. should be consulted.

Attention!

Our Valued Customer,

We kindly request that you obey the warnings mentioned below:

- Definitely have the “Warranty Document” approved when you get the machine.
- Use the machine in a way that is in accordance with the fundamentals that are mentioned in the user’s guide of the machine.
- Refer to the nearest GEDIK WELDING authorized service or the service center of GEDIK WELDING when a problem comes up.

Thank you for prefering one of GeKaMac® products.

AT UYGUNLUK BEYANI

EU DECLARATION OF CONFORMITY

Bu uygunluk beyanı yalnızca imalatçının sorumluluğu altında düzenlenir.

This declaration of conformity is issued under the sole responsibility of the manufacturer.

İstanbul, Turkey, 08.03.2024

İmalatçı / Manufacturer

GEDİK KAYNAK SANAYİ ve TİCARET A.Ş.

Ankara Cad. No.306 Seyhli Pendik ISTANBUL TURKIYE

Ürün / Product	ARC WELDING MACHINE
Marka-Model / Brand- Model	PoWerPlus CUT 100

Yukarıda tanımlanan beyanın nesnesi ilgili uyumlaştırılmış AB mevzuatı ile uyumludur.

The object of the declaration described above, is in conformity with the relevant union harmonisation legislation.

Direktifler / Directives 2014/30/EU & 2014/35/EU & 2009/125/EC

Uyumlaştırılmış standartlar ve uygunluğun deklare edilmesiyle ilişkili diğer referanslar.

References to the relevant harmonised standarts used and references to the other technical specifications in relation to which conformity is declared.

EN IEC 60974-1:2018-A1:2019
EN IEC 60974-10:2021

Bu ekipman, talimatlara uygun kurulduğunda, bakımı yapıldığında ve kullanıldığında belirtilen standartlara uygundur. Makine üzerinde bir değişiklik yapıldığında veya yanlış kullanımda deklarasyon geçersiz olur.

The equipment is in compliance with pertinent legislation when installed, utilized, and maintained in accordance with the enclosed instructions. This declaration will be invalid under any modification or improper use.

İmalatçı Adına imzalayan / Signed for and on behalf of:

Hatice Özel, Equipment Business Unit Director

INDEX

Page

1. Safety Rules.....3

2. Working Prenciple of Main Circuit 5

3. Technical Parameters.....5

4. Features of PoWer Plus+CUT 100 6

5. Installation 7

6. Layout of the Front and Rear Panel.....8

7. Cutting Operation.....9

8. About the Cut Voltage Divider..... 10

9. Basic Troubleshooting Guide 12

9.1. Pilot Arc Troubles..... 13

9.2. Cutting Troubles..... 14

10. Electrical Principle Drawing 15

11. Torch Parts Connection Schematic Drawings..... 16

12. Warranty Conditions..... 17

13. Warranty Document..... 18

1. SAFETY RULES

Important Safety Precautions

OPERATION AND MAINTENANCE OF PLASMA ARC EQUIPMENT CAN BE DANGEROUS TO YOUR HEALTH.

- Plasma arc cutting produces intense electric and magnetic emissions that may interfere with the proper function of cardiac pacemakers, hearing aids, or other electronic health equipment. Persons who work near plasma arc cutting applications should consult their medical health qualified technician and the manufacturer of the health equipment to deter- mine whether a hazard exists.
- To prevent possible injury, read, understand and follow all warnings, safety precautions and instructions before using the equipment.

GASES AND FUMES

Gases and fumes produced during the plasma cutting process can be dangerous and hazardous to your health.

- Keep all fumes and gases from the breathing area. Keep your head out of the cutting fume plume.
- Use an air-supplied respirator if ventilation is not adequate to remove all fumes and gases.
- The kinds of fumes and gases from the plasma arc depend on the kind of metal being used, coatings on the metal, and the different processes. You must be very careful when cutting or cutting any metals which may contain one or more of the following:

Always read the Material Safety Data Sheets (MSDS) that should be supplied with the material you are using.

These MSDSs will give you the information regarding the kind and amount of fumes and gases that may be dangerous to your health.

- Use special equipment, such as water or down draft cutting tables, to capture fumes and gases.
- Do not use the plasma torch in an area where combustible or explosive gases or materials are located.
- Phosgene, a toxic gas, is generated from the vapors of chlorinated solvents and cleansers. Remove all sources of these vapors.

ELECTRIC SHOCK

Electric Shock can injure or kill. The plasma arc process uses and produces high voltage electrical energy. This electric energy can cause severe or fatal shock to the operator or others in the workplace.

- Never touch any parts that are electrically “live” or “hot.”
- Wear dry gloves and clothing. Insulate yourself from the work piece or other parts of circuit.

1. SAFETY RULES (Continuing)

- Repair or replace all worn or damaged parts.
- Extra care must be taken when the workplace is moist or damp.
- Disconnect power source before performing any service or repairs.
- Read and follow all the instructions in the Operating Manual.

FIRE AND EXPLOSION

Fire and explosion can be caused by hot slag, sparks, or the plasma arc.

- Be sure there is no combustible or flammable material in the workplace. Any material that cannot be removed must be protected.
- Ventilate all flammable or explosive vapors from the workplace.
- Do not cut or weld on containers that may have held combustibles.
- Provide a fire watch when working in an area where fire hazards may exist.
- Hydrogen gas may be formed and trapped under aluminum workpieces when they are cut underwater or while using a water table. DO NOT cut aluminum alloys underwater or on a water table unless the hydrogen gas can be eliminated or dissipated. Trapped hydrogen gas that is ignited will cause an explosion.

NOISE

Noise can cause permanent hearing loss. Plasma arc processes can cause noise levels to exceed safe limits. You must protect your ears from loud noise to prevent permanent loss of hearing.

- To protect your hearing from loud noise, wear protective ear plugs and/or ear muffs. Protect others in the workplace.
- Noise levels should be measured to be sure the decibels (sound) do not exceed safe levels.

PLASMA ARC RAYS

Plasma Arc Rays can injure your eyes and burn your skin. The plasma arc process produces very bright ultra violet and infra red light. These arc rays will damage your eyes and burn your skin if you are not properly protected.

- To protect your eyes, always wear a cutting helmet or shield. Also always wear safety glasses with side shields, goggles or other protective eye wear.
- Wear cutting gloves and suitable clothing to protect your skin from the arc rays and sparks.
- Keep helmet and safety glasses in good condition. Replace lenses when cracked, chipped or dirty.
- Protect others in the work area from the arc rays. Use protective booths, screens or shields.

2. WORKING PRENCIPLE OF MAIN CIRCUIT

The working principle of CUT100 Air Plasma Cutting Machine is shown as the following figure. Three-phase 380V work frequency AC is rectified into DC (about 530V), then it is converted to medium frequency AC (about 20 KHz) by inverter device (discrete IGBT), after reducing voltage by medium transformer (the main transformer) and rectified by medium frequency rectifier (fast recovery diode), and is outputted by inductance filtering. The circuit adopts current feedback control technology to insure current output stably. Meanwhile, the cutting current parameter can be adjusted continuously and steplessly to meet with the requirements of cutting craft.

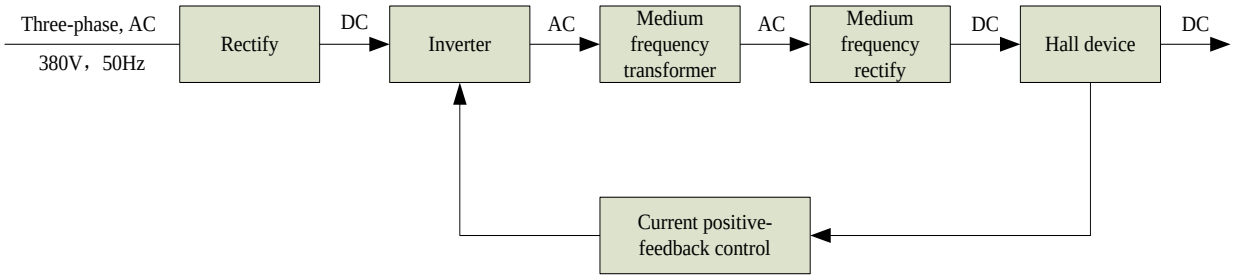

fig 2.1 Working principle diagram

3. TECHNICAL PARAMETERS

Models / Parameters		PoWer Plus+CUT 100
Rated input voltage（V）		3-380V±15%，50/60Hz
Rated input current（A）		36,8
Rated input power（kW）		19
Cutting current adjustment range （A）		20～100
Pilot current（A）		25
No-load voltage (V)		365
Duty cycle（40℃ 10minutes）		100%(100A)
The max. cutting thickness to Carbon steel （mm）		55
Optimal cutting thickness (mm)	Carbon steel	≤40
	Stainless steel	≤40
	Aluminium	≤30
	Cuprum	≤24
Dimensions（mm）		640*240*445
Protection class		IP23
Insulation class		H
Net weight (kg)）		23
Cooling method		FAN

Table2.1 Technical parameters

Note: The above parameters are subject to change with the improvement of machines.

4. FEATURES OF PoWer Plus+CUT 100

1. **IGBT parallel balanced current technology and digital control technology.**
2. **Wider input voltage flexibility** provides peak performance power under variable conditions (±15%) for steady cuts.
3. **EMI filter** restrains the EMI transmission of the power.
4. **Starts without high-frequency** so it will not interfere with controls or computers.
5. **Pilot Arc Controller** increases cutting capabilities and speeds, and improves tip life. So it can be applied to **cut netlike workpiece**.
6. **Various protective and alarm functions for pressure, tip, over-temperature and over-current** allow faster troubleshooting, eliminating unnecessary downtime.
7. **Back striking tip and electrode** ensure the velocity of striking and the quality of arc, and extend the life of them.

5. INSTALLATION

Use the packing lists to identify and account for each item.

1. Inspect each item for possible shipping damage. If damage is evident, contact your distributor and / or shipping company before proceeding with the installation.
2. When using forklift, its arm length must be long enough to reach the outside so as to ensure lifting safely.
3. The movement may bring the potential danger or substantive hazard, so please make sure that the machine is on the safe position before using.

Supply input connection of CUT100 power is shown as the Fig3.1.

1. Check your power source for correct voltage before plugging in or connecting the unit
2. Power Cord and Plug This power supply includes an input power cord and plug suitable for 380V AC 3 - Phase input power.
3. If the power supply voltage continually goes beyond the range of safe work voltage range, it will shorten the welder life-span. The following measures can be used:

- Change the power supply input. Such as, connect the welder with the stable power supply voltage of distributor;
- Reduce the machines using power supply in the same time;
- Set the voltage stabilization device in the front of power cable input.

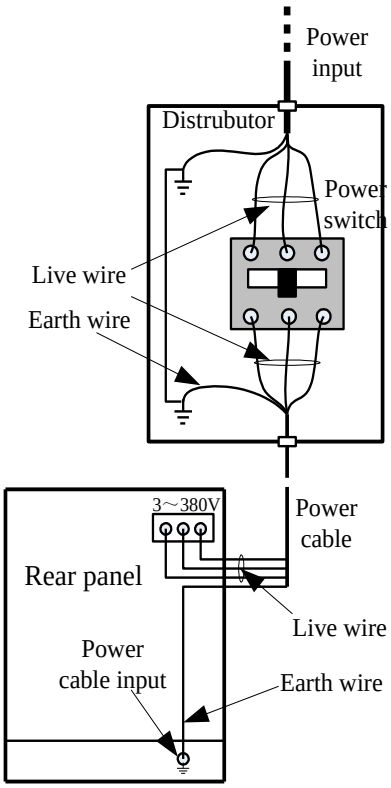

Figure 3.1

1. Connecting Gas Supply to Unit

Connect the gas line to the inlet port of the gas filter on the rear panel.

2. Check Air Quality

To test the quality of air, put the RUN / SET switch in the SET (down) position, check if there are any oil or moisture in the air.

6. LAYOUT OF THE FRONT AND REAR PANEL

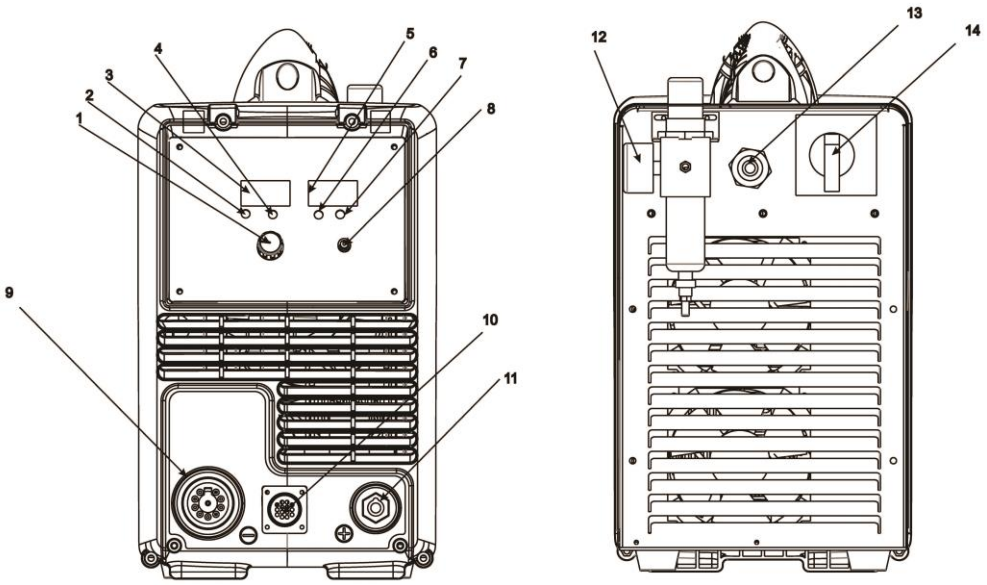

Fig 4.1 schematic drawing of the front panel and rear panel

1. Cutting current regulator it is used to regulate the current when cutting.

2. Power pilot lamp

3. Current display

4. Over-current, over-heat alarm when over-heat, over-current, the lamp would be on.

5. Barometer display

6. Cutting gun improper installation and air pressure low alarm

7. Work lamp turn on the switch of the cutting gun, generate the voltage, the lamp on

8. RUN/SET: when cutting the workpiece, turn to the “RUN”; when doing gas test, turn to the “SET”.

9.Cutting gun connector connected to the cutting machine

10.remote control plug

11.Positive output cable connected to the workpiece

12.Barometer ensure there are no impurity and moisture in the compressed air

13.Power cable connected to the appreciate power supply

14.Power switch turn on or off the power source

7. CUTTING OPERATION

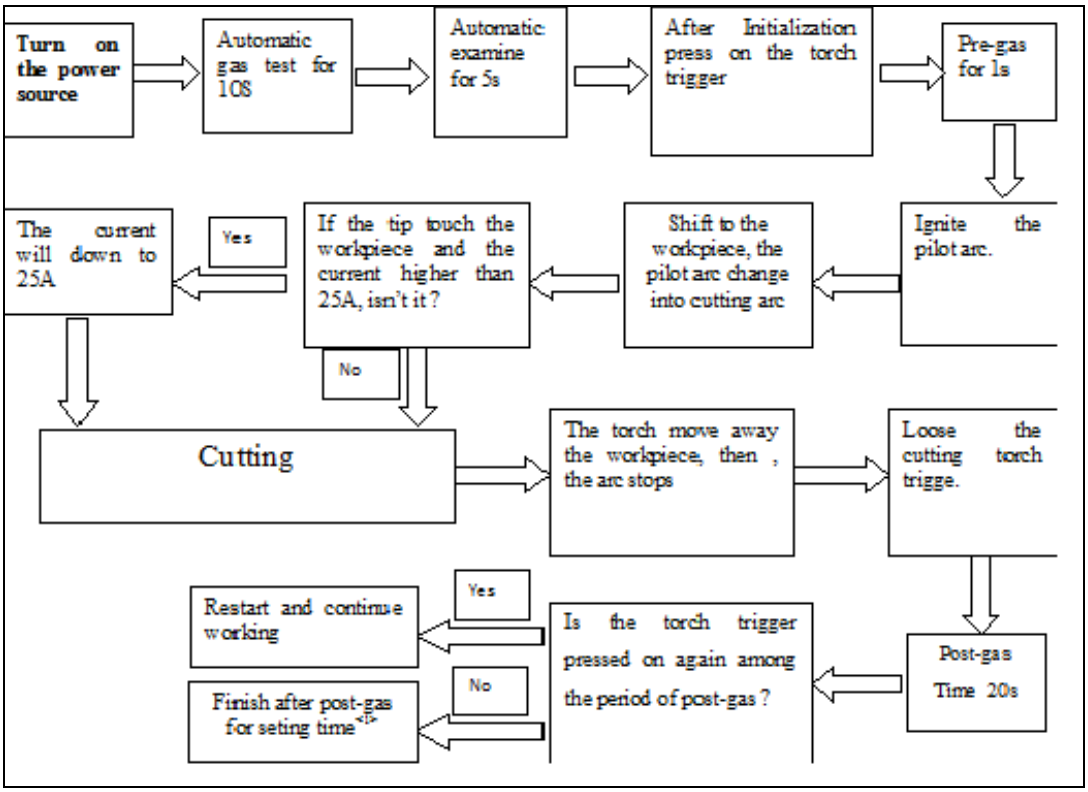

Note:

1) The alarm lamp on when cutting, it is needed to loose the switch of the torch until the alarm release, then press on the switch to restart working.

2) In the automatic gas test and examine, press on the cutting torch, there will no reflection.

3) After a long usage, the surface of the electrode and nozzle will have Oxidation reaction. Please replace the electrode and nozzle, For The alarm lamp will on when install the shield cup, and stop working

4) It is forbidden to take down the fittings of the cutting torch when the trigger is pressed.

5) If the cutting current is higher than 40A, when the tip touch the workpiece, the current will down to 40A in order to protect the tip.

6) Among the period of post gas, if you press the trigger for a long time, the arc restart; if you press and loosen the trigger quickly, the gas stops, after it you can press the trigger for a long time to restart the machine as well.

7. CUTTING OPERATION (Continuing)

Account for the alarm indicator:

1) When the machine appears over-heat or over-current , the yellow indicator (lamp 2) on the front panel will on continually.
   a) Over-heat: The alarm will release after the period of fan cooling. You can restart the machine.
   b) Over-current: The alarm is beyond retrieve. You must ask the qualified technician to check the machine.
2) When any of the torch parts (include Tip, electrode, shield cup and gas distributor) isn't installed, the red indicator (lamp 3) glitters.
3) When the air pressure is too lower, the indicator (lamp 3) will on continually.
4) When the gas distributor is un-installed only, there is not alarm while operating the machine, and when you press the trigger, there is no arc and no load as well. Open the torch and check it.

8. ABOUT THE CUT VOLTAGE DIVIDER

The CUT power supplies are equipped with an optional, factory-installed, four-position voltage divider that is designed to be safely connected without tools. The built-in voltage divider provides a scaled down arc voltage of 20:1, 30:1, 40:1, and 50:1 (maximum output of 18 V). An optional receptacle on the rear of the power supply provides access to the scaled down arc voltage and signals for arc transfer and plasma start.

Note:
The factory presets the voltage divider to 20:1. To change the voltage divider to a different setting, refer to the section on the next page.

⚠	**The factory-installed internal voltage divider provides a maximum of 18 V under open circuit conditions. This is an impedance-protected functional extra low voltage (ELV) output to prevent shock, energy, and fire under normal conditions at the machine interface receptacle and under single fault conditions with the machine interface wiring. The voltage divider is not fault tolerant and ELV outputs do not comply with safety extra low voltage (SELV) requirements for direct connection to computer products.**

8. ABOUT THE CUT VOLTAGE DIVIDER (Continuing)

Note:

The cover on the machine interface receptacle prevents dust and moisture from damaging the receptacle when not in use. This cover should be replaced if damaged or lost.

Installation of the machine interface cable must be performed by a qualified service technician. To install a machine interface cable:

1. Turn OFF the power and disconnect the power cord.
2. Remove the machine interface receptacle's cover from the rear of the power supply.
3. Connect the machine interface cable to the power supply.

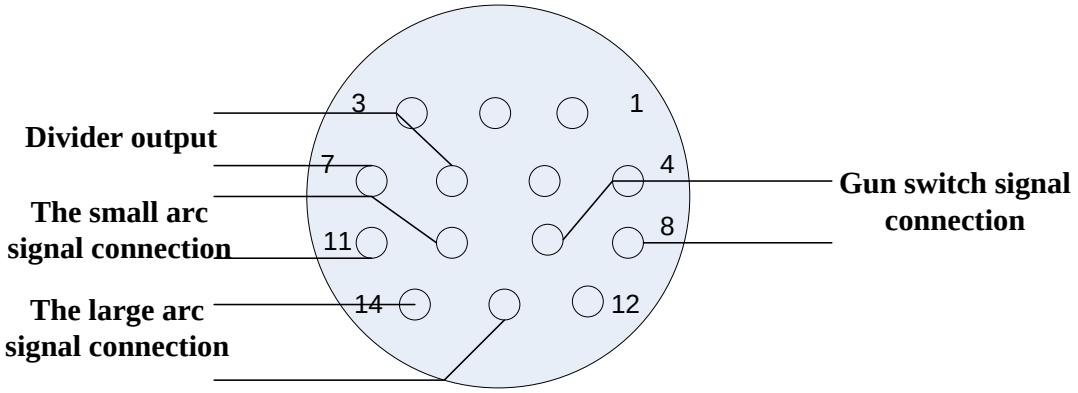

Refer to the following table when connecting the CUT system to a torch height controller or CNC controller with a machine interface cable.

signal	type	Instruction	The connector socket	Cable ends
Start (start plasma)	Input	Normally open. 18 VDC open circuit voltage at START terminals. Requires dry contact closure to activate.	8、9	8（yellow）、 9（green）
Transfer(start machine motion)	Output	Normally open. Dry contact closure when the arc transfers. 120 VAC/1 A maximum at the machine interface relay or switching device (suplied by the customer).	13、14	13（blue）、 14（white）
Ground	Ground			
Voltage divider	Output	CUT: Divided arc signal of 20:1, 30:1, 40:1, 50:1 (provides a maximum of 18 V).	6（+）、7（-）	6（red）、7（black）

8. ABOUT THE CUT VOLTAGE DIVIDER (Continuing)

Setting the five-position voltage divider on the CUT

The factory presets the voltage divider to 20:1. To change the voltage divider to a different setting:

1. Turn OFF the power supply and disconnect the power cord.
2. Remove the power supply cover.
3. Locate the voltage divider DIP switches on the left side of the power supply.

Note: the table below for the shift and scale selection

Scale Selection / Dial Number	20:1	30:1	40:1	50:1
1	ON	1	1	1
2	2	ON	2	2
3	3	3	ON	3
4	4	4	4	ON

CNC control cable selectable type:

Number	Standard（m）
6.310.660	5
6.310.660-D	10
6.310660-E	15

9. BASIC TROUBLESHOOTING GUIDE

WARNING

There are extremely dangerous voltage and power levels present inside this unit. Do not attempt to diagnose or repair unless you have had training in power electronics measurement and troubleshooting techniques.

9. BASIC TROUBLESHOOTING GUIDE (Continuing)

A. Turn on the machine, the power indicator lights up, but both of the fan and the air control valve is no action.

1. Absent Phases. Please check the input lines, and connect it correctly.
2. The main board in the machine is break. Please ask the qualified technician to change it.

B. Turn on the machine, the TIP/GUN/GAS indicator lights up.

1. Gas pressure is too low. Adjust the gas pressure to 65psi/4.5bar. The Barometer indicate to 0.45~0.5MPa.

C. Turn on the machine, the TIP/GUN/GAS indicator glitter.

1. The shield cup is unfitted installation, Turn off the power source, install and screw it properly, then turn on the power source.
2. The Tip or electrode is unfitted installation, Turn off the power source, and install and screw shield cup properly, then turn on the power source.

D. The temperature indicator lights up after the machine working a few of minutes.

1. Air flow blocked, check for blocked air flow around the unit and correct condition.
2. Fan blocked, check and correct condition.
3. The machine is over-heat, let it cool down for at least 5 minutes. Make sure the machine has not been operated beyond the Duty Cycle (refer to technology parameters in Section 2).
4. Input voltage over the normal range, choosing the proper voltage (refer to technology parameters in the Section).
5. Faulty components in the machine, return for repair or have qualified technician repair per Service Manual.

9.1. PILOT ARC TROUBLES

A. Torch failed to ignite the arc when torch is triggered.

1. The system is set in “SET” mode, change it to “RUN” mode.
2. Faulty in torch parts, inspect torch parts and replace it if necessary.
3. Gas pressure is too high or too low, adjust it to proper state.
4. Faulty components in the machine, return for repair or have qualified technician repair per Service Manual.

B. Difficult igniting

1. The gas distributor is un-installed
2. Worn torch parts (consumables), shut off input power. Remove and inspect torch shield cup, tip, starter cartridge, and electrode. Replace electrode or tip if worn; replace starter cartridge if end piece does not move freely; replace shield cup if excessive spatter adheres to it.
3. The machine is in trouble. Please ask the qualified technician to check it and repair the machine.

9.1. PILOT ARC TROUBLES (Continuing)
C. The torch is triggered, but the pilot arc isn't change to the cutting pilot. The power indicator lights up; Gas flows; Fan operates. 1. It is inaccurate connection between torch and power supply, check the torch leads are properly connect to power supply. 2. Work cable not connected to work piece, or connection is poor, make sure that work cable has a proper connection to a clean and dry area of the workpiece. 3. Faulty components in the machine, return for repair or have qualified technician repair per Service Manual. 4. Faulty Torch, return for repair or have qualified technician repair it. **D. Arc shuts off during operation, and it will not restart when torch is triggered.** 1. Power Supply is overheated (OC/OT lamp on), let unit cool down for at least 5 minutes. Make sure the unit has not been operated beyond Duty Cycle limit. Refer to Section 2 for duty cycle specifications. 2. Gas pressure too low (the TIP/GUN/GAS lamp on when press on torch switch is on), check source for at least 65 psi / 4.5 bar; adjust as needed. 3. Torch consumables worn, check torch shield cup, tip, starter element, and electrode; replace as needed. Faulty components in unit:, return for repair or have qualified technician repair per Service Manual.

9.2. CUTTING TROUBLES
A. No gas flow; the power lamp on; Fan operates 1. Gas pipe not connected or pressure is too low, check gas connections. Adjust gas pressure to proper setting. 2. Faulty components in the unit, return for repair or have qualified technician repair. **B. Low cutting output** 1. Incorrect setting of cutting current (A), check and adjust to proper setting. 2. Faulty components in unit, return for repair or have qualified technician repair. **C. Torch can cut but the cutting quality is poor** 1. Current (A) control set too low, increase current setting. 2. The torch move too fast across the workpiece, reduce cutting speed. 3. Excessive oil or moisture in torch, hold torch 1/8 inch (3 mm) from clean surface while purging and observe oil or moisture buildup (do not activate torch). If there are contaminants in the gas, additional filtering may be needed. 4. Lack of air pressure. Please check the air pressure and air flow, adjust it to the appropriate position

10. ELECTRICAL PRINCIPLE DRAWING

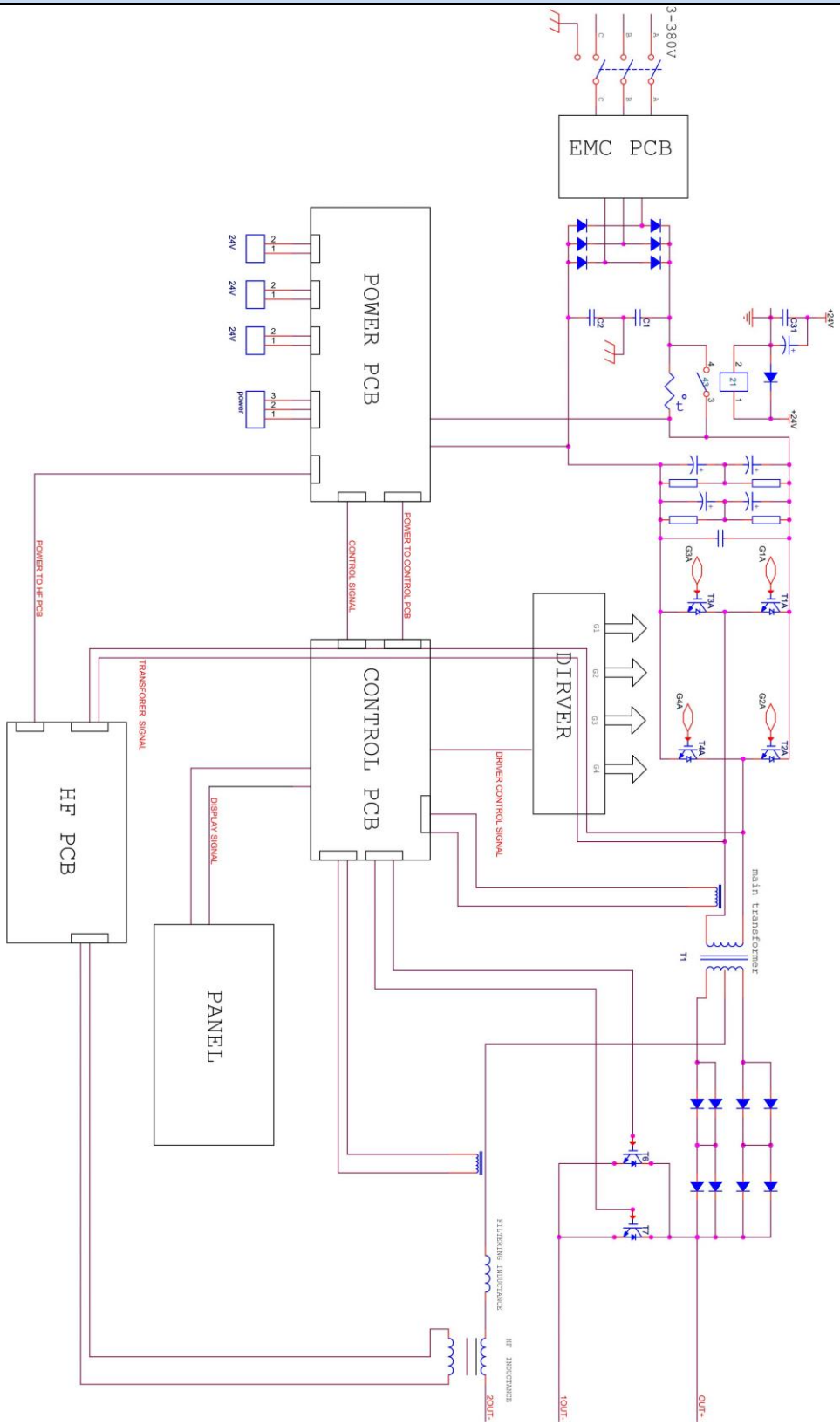

11. TORCH PARTS CONNECTION SCHEMATIC DRAWINGS

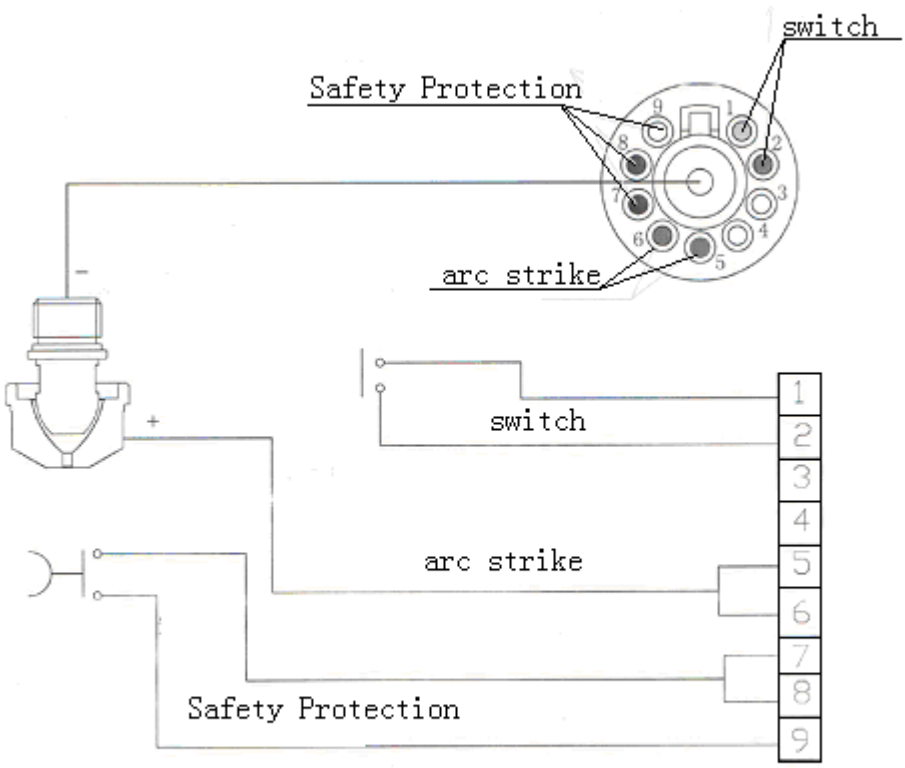

12. WARRANTY CONDITIONS
1. The length of the warranty starts on the date of delivery and it is for 1 year. 2. The whole merchandise including all its parts are covered by the warranty of our company. 3. If the merchandise breaks down within the length of the warranty, the time spent in the repair shop will be added to the length of the warranty. The length of repair of the merchandise is at the maximum 20 working days. This period of time starts on the date that the merchandise was delivered at one of the following locations: A service station or the seller of the merchandise or dealer or agency or representation office or importer or manufacturer, in this order if there are no service stations. 4. If the merchandise breaks down either due to material and workmanship or assembly lines within the length of the Warranty, it will be repaired without demanding any money under the name of expenditure of workmanship, the cost of the changed piece or under any other name. 5. Replacement operation will be done without charge in cases where the merchandise repeats the same fault more than twice or different faults come up more than four times within the length of the warranty, the length of the repair exceeds maximum necessary time and the determination of the unrepairability of the merchandise by a report that is prepared either by a service station or the seller or a dealer or an agency or a representation office or the importer or the manufacturer, in this order, if there are no service stations. 6. Faults that are results of misuse according to the user's guide of the merchandise are not covered by the warranty. 7. Ministry of Science Industry and Technology, The Protection of the Consumer and Competition General Directorate can be refered to whenever a problem concerning the warranty document comes up. 8. Earth clamp and plasma holder kits are not under warranty.

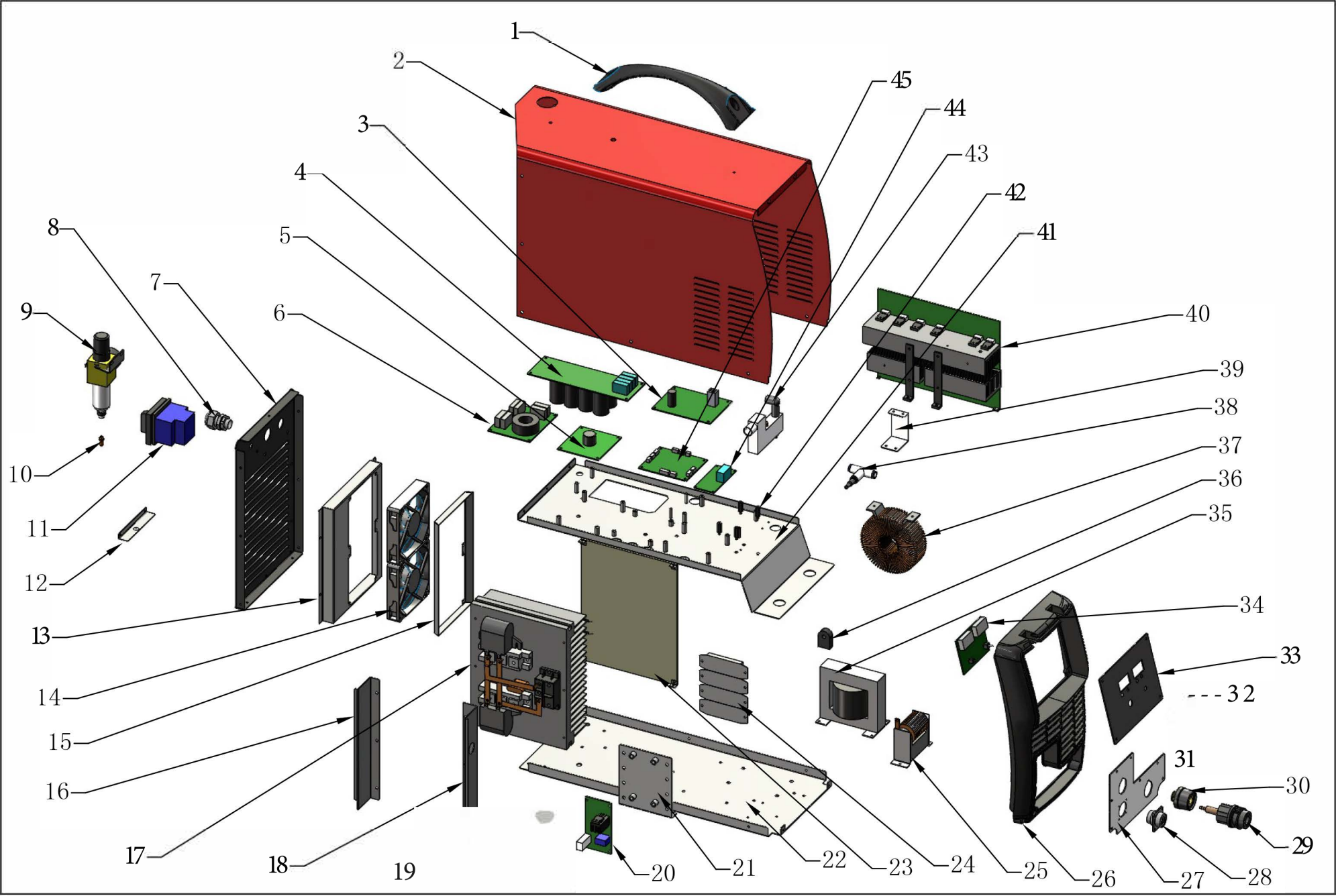
1
2
3
4
5
6
7
8
9
10
11
12
13
14
15
16
17
18
19
20
21
22
23
24
25
26
27
28
29
30
31
32
33
34
35
36
37
38
39
40
41
42
43
44
45

S.008RM.680-TR POWER PLUS CUT 100					
No	Item code	SAP KODU	Description	Unit	QTY
1	8.253RM.003-B	6064200067	FLAMA handle	PCS	1
2	8.301RM.680	*	Shell	PCS	1
3	W.496RM.397-F	6064100061	Three phase power board	PCS	1
4	W.496RM.443-B	6064000098	CUT100 capacitor board	PCS	1
5	W.496RM.451-A	6064000106	Three phase drive board	PCS	1
6	W.496RM.286-D	6064000072	Wide voltage EMC board	PCS	1
7	8.068RM.680	6064200043	Rear panel	PCS	1
8	7.155.003		Cable joints	PCS	1
9	7.253.465	6064200308	Oil water separator	PCS	1
10	8.462.635	*	Oil water separator joint	PCS	1
11	7.232.742-A	*	Rotating switch	PCS	1
12	8.123RM.358	*	Tracheal guide plate	PCS	1
13	8.122RM.680-B	*	Fan cover	PCS	1
14	7.720.056	6064100060	Fan	PCS	2
15	8.123RM.354	*	Wind guide cover	PCS	1
16	8.123RM.353-A	*	Sealing plate (II)	PCS	1
17	W.422RM.640-UK	*	IGBT assembly	PCS	1
18	8.123RM.352-A	*	Sealing plate (1)	PCS	1
19	8.046RM.002	*	Machine foot	PCS	1
20	W.496RM.247-F	6064000071	PCB substrate, three-phase high-freque	PCS	1
21	8.123RM.351-A	*	resistance installation plate	PCS	1
22	8.055RM.680-B	*	Base board	PCS	1
23	8.713RM.228	*	Insulation board	PCS	1
24	7.445.256	*	resistance	PCS	5
25	L.271RM.680-C	6064000306	High frequency inductance	PCS	1
26	8.069RM.971	6064200046	front panel	PCS	1
27	8.062RM.680-G	*	Circuit board installation board	PCS	1
28	7.132.114-A	1000901989	14 pin aviation socket	PCS	1
29	7.667.021	6064100430	Central socket	PCS	1
30	7.152.312-A	*	Euro connector	PCS	1
31	7.458.430	*	knob	PCS	1
32	7.557.031-A	6064200375	Waterproof cap	PCS	1
33	8.306RM.680		Panel mounting plate	PCS	1
34	W.496RM.423-A	6064000120	CUT100 front panel	PCS	1
35	L.271RM.003-A	*	inductance	PCS	1
36	7.321.130	6064100082	Current transformer	PCS	1
37	L.185RM.681-A	6064100418	Amorphous transformer	PCS	1
38	7.624.270	6064100569	T-shaped tee connector	PCS	1
39	8.123RM.588-A	*	Installation board	PCS	1
40	W.423RM.422-TR	6064100427	MUR assembly	PCS	1
41	8.062RM.680-G	*	Circuit board installation board	PCS	1
42	7.503.510-A	*	Hexagonal isolation column	PCS	4
43	7.253.465	6064200308	Oil water separator	PCS	1
44	W.496RM.228	6064000099	interface board	PCS	1
45	WP.496RM.771-C	*	CUT 100 CNC control PCBA board	PCS	1

GeKaMac®

Gedik Welding Machines

Warranty Document

MACHINE INFORMATION
Brand : GeKaMac®
Model : ……
Serial Number : ……

CUSTOMER INFORMATION
Company Name : ……
Authorized Person : ……
Telephone : ……
Company Address : ……
City/Country…… ……
E-Mail :…… @……
Signature /Cachet :

SERVICE INFORMATION
Authorized Service : ……
Service Staff : ……
Installation Date : ……/……/……
Warranty Starting Date : ……
Warranty Expiration Date : ……
Signature /Cachet :

GeKaMac®

Gedik Welding Machines

Warranty Document

MACHINE INFORMATION
Brand : GeKaMac®
Model : ……
Serial Number : ……

CUSTOMER INFORMATION
Company Name : ……
Authorized Person : ……
Telephone : ……
Company Address : ……
City/Country…… ……
E-Mail :…… @……
Signature /Cachet :

SERVICE INFORMATION
Authorized Service : ……
Service Staff : ……
Installation Date : ……/……/……
Warranty Starting Date : ……
Warranty Expiration Date : ……
Signature /Cachet :

Manufacturer:
Company Name: Shanghai HI-ZONE Welding Equipment Manufacture Co.,Ltd.
Company adress: A-2nd Floor, No.99-3, Shenmei Road, Zhoupu, Pudong, Shanghai 201318 China
Contact Details: T: +86 21 31295500 | F: +86 21 51919711

Importer:
Gedik Kaynak San ve Tic A.Ş
Company Adress: Ankara Cad No: 306 Seyhli 34906 Pendik, Istanbul
TURKEY
Contact Details: +90 216 3785000

PoWer Plus Series

GeKaMac®

Gedik Welding Ankara Caddesi
No : 306 Şeyhli 34906 Pendik, İstanbul / Turkey
T +90 216 378 50 00 F +90 216 378 20 44
gedik@gedik.com.tr